Hydro•X® Power Connected Sensor Flush Valve for Concealed Back Spud Water Closet

ZHYD52-SP-W2

TAG _____

ARCHITECTURAL/ENGINEERING SPECIFICATION

Zurn Concealed Hydro•X® Power series of sensor flush valves for wall mounted water closets are designed for reliable, hands-free operation that lasts the life expectancy of a commercial restroom. This hydropowered sensor flush valve for wall mounted water closets requires no hard wiring or battery replacement, which means lower installation and maintenance costs. The gear-operated flush valve features a clog-resistant, triple filtered diaphragm. It is sensor activated to support a more hygienic environment by eliminating touch points. Pair with Hydro•X® Power faucets to maximize sustainable restroom goals.

PRODUCT FEATURES & TECHNICAL SPECIFICATION

plumbSMART™ Portal

- Know water consumption
- Track uses per fixture
- Receive real-time alerts
- Manage maintenance tasks
- Receive insights on your data
- Intelligent Continuous Flush Alert for Flood Prevention

Flush valve

- Architectural front wall plate with hidden fasteners for a clean aesthetic and a compact snap-in design for easy service access.
- Hydro•X® Power technology delivers sustainable performance by providing renewable, uninterrupted hydropower designed to last the life expectancy of a commercial restroom.
- Uses EZ Gear technology, a gear-driven ceramic cartridge that is less susceptbile to debris and buildup for easy maintenance; outlasts and outperforms solenoids.
- Industry-leading, triple filtered AquaVantage diaphragm, gaskets and seals are made of chemical-resistant thermoplastic elastomer, which lasts 8-10 times longer than traditional rubber, reducing maintenance costs.
- Automatic touchless sensor activation reduces guest visits without a flush and can help reduce germ transmission.
- Electronic override button delivers on-demand manual flushing.
- Heavy-duty wall plate construction with a highly polished chrome-plated, brushed nickel or matte black PVD finishes provides long-term durability and vandal resistance in a contemporary design.
- Standard 24-hour line flushing to help minimize stagnation and maintain fixture trap seals to protect against sewer gases during periods of inactivity.
- User-in-view LED indicator light.
- Concealed flush valve is also furnished with labor saving flexible stainless steel outlet piping for easy installation, a 1" wheel control stop with internal siphon-guard protection, sweat solder kit, and high-pressure vacuum breaker assembly for 1-1/2" back spud inlet.
- Wall plate dimensions: 5" (W) x 5" (H)
  Wall Opening: 4 ⅖" (W) x 4 ⅖" (H)
- Operating Pressure: 25 psi (running) - 80 psi (static)
  Higher running pressure may be required for some fixtures
  Consult fixture manufacturer for details.

ZURN GATEWAY

- Communicates via Ethernet or LTE
- Works with all Zurn connected devices
- Connects all endpoints up to 1,000 ft radius

COMPLIANCE AND CERTIFICATION

- Complies with ASSE 1037/ASME A112.1037/CSA B125.37
- ADA Compliant

*This product should be used with a WaterSense labeled counterpart with a compatible flush volume to ensure that the entire system meets the requirements for water efficiency and performance.

FLOW OPTIONS

	FLUSH VOLUME GPF	WATERSENSE* CEC, & CALGREEN COMPLIANT
-ONE	1.1	✓
-HET	1.28	✓
-WS1	1.6	
-HET-DF	1.28/1.1	✓
-WS1-DF	1.6/1.1	

SUFFIX OPTIONS

-8L 8" [203mm] Copper Tube Extension
-9L 9" [2228mm] Copper Tube Extension
Other
(Specify Length Dimension)

ALTERNATIVE FINISHES

-BN Brushed Nickel
-MB Matte Black

WHEN INSTALLING IN A HANDICAP STALL:

Per the ADA Guidelines (section 604.9.4) it is recommended that the grab bars be split or shifted to the wide side of the stall. If grab bars must be present over the valve, use the alternate ADA installation as shown.

ARCHITECTURAL & ENGINEERING APPROVAL

The information contained in this document is subject to change without notice. Please contact Zurn for most up to date information.

Rev. A | Date:8/14/2026 | C.N. No. 147576 | Prod./Dwg. No. SS ZHYD52-SP-W2

GATEWAY OPTIONS (REQUIRED & SOLD SEPARATELY)

-LTE ZGW-LORA-W1-LTE

NOTE: plumbSMART™ is free-to-connect to a basic plan with an option to upgrade to a premium plan.
NOTE: LTE charges will apply to basic plan.

HOW IT WORKS

Integrated sensors continuously monitor flush valve activations and water usage. This data is transmitted to the Zurn gateway via LoRa communication. The Zurn gateway passes the data into the Zurn cloud where the data is enriched and presented in the plumbSMART web portal and mobile app. Facilities managers and/or maintenance personnel can view all data and trends in the plumbSMART™ portal and may opt to receive real-time alerts via email, text message and/or push notifications if any of these readings exceed customizable parameters for high hourly or daily usage levels. All notifications and alert parameters are adjustable via the plumbSMART™ portal. A maintenance planning tool and data insights hub are available in plumbSMART.
For more information, visit https://www.zurn.com/innovation-efficiency/plumbSMART.

To access the plumbSMART™ portal, a Zurn Gateway must be installed within 1,000 feet of the connected product, and connected products must be registered in the Zurn plumbSMART™ portal. A single Zurn Gateway can be used to connect hundreds of Zurn connected plumbing products.

CONNECTING TO THE plumbSMART™ PORTAL

1. Visit www.zurn.com/plumbSMART-connect to save time and money on your installation.
   You can also call us at 844-987-6737
2. Provide the serial number and contact name, email address, and basic information about the installation site.
3. We will activate your plumbSMART™ account, set up your enterprise, and give you guidance on how to register each connected product as you install it.
4. We will send a confirmation email with a link, or you can go to plumbsmart.zurn.com to log into your plumbSMART™ account for the first time.
5. Add other users and installers to your plumbSMART™ account.
6. Make sure you and/or your installers have the plumbSMART™ mobile app, which you can download from the iPhone App Store or Google Play.
7. Using the mobile app, scan or enter the serial number to register and locate each connected plumbing product as you install it.
8. Watch the how-to videos in the plumbSMART™ portal's support section if you get stuck, or call us at 844-987-6737 for support.

GET IT ON Google Play

Download on the App Store

Rough-in dimensions/Overview dimensions

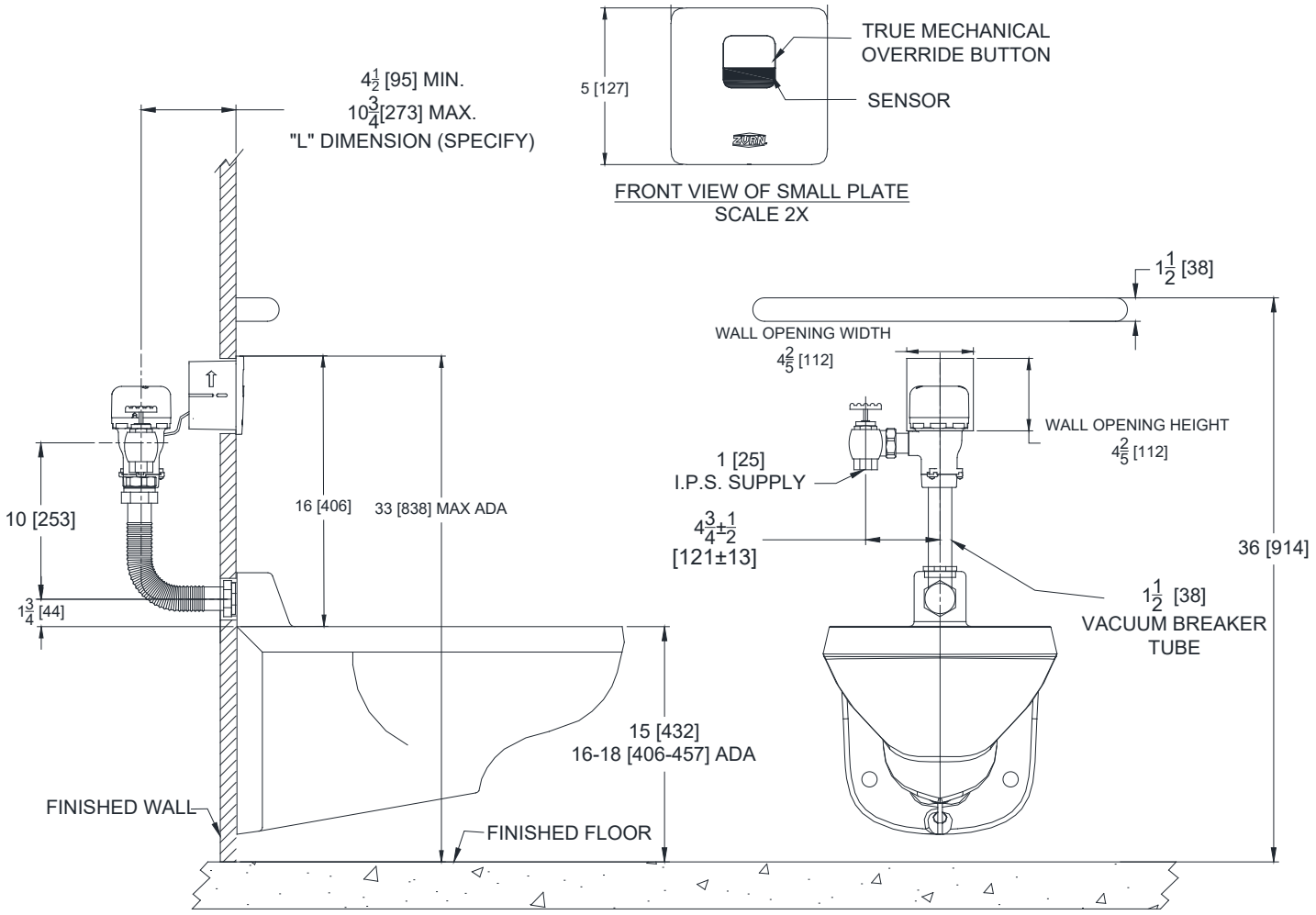

ALTERNATE ADA INSTALLATION

Lower water supply rough-in to 10” and mount grab bar at the 36” maximum allowed height.

Patent zurn.com/patents
US 1.855.ONE.ZURN CANADA 1.877.892.5216
ZURN.COM
by zurn ELKAY Water Solutions